Design and Realization of Compass Navigation Control System for Mobile Robot

HUANG Wei-zhong, LIANG Jie-shen
(College of Automation Science and Engineering, South China University of Technology, Guangzhou, 510640, China)

Abstract: Many controlling systems of mobile robot are based on rail-guidance or line-tracking sensors, thus their routes, speeds and agilities are limited. In this design, the author suggests a resolution, which bases on MSP430 MCU, for controlling system of mobile robot navigation. The design combines a compass with two encoders. The reliability of direction is enhanced and the accuracy is improved.

Keywords: Mobile robot; MSP430; Electronic compass; Encoder;

1 Introduction

ABU ROBOCON, Asia-Pacific Broadcasting Union Robot Contest, is a contest that involves physics, mathematics and mechatronics. The primary competition of the contest could be divided into two parts, the design of mechanisms and the motion control of robots. In order to accomplish the task of moving stuffs in the contest, the robot should be able to move itself, avoid obstacles, and catch stuffs. Some scholars in robotics designed control systems for mobile robots based on line tracing sensors [1],[2],[3]. Admittedly, they functioned well. However, their agilities were limited due to the restriction of the lines. Moreover, speed and accuracy are key factors in the contest. This paper presents a new method for mobile navigation. The system abandons the old tracing method, adopts electronic compass that allows the robot to detect the azimuth, and adopts encoders that allows the robot to measure the distance. Meanwhile, the system avoids some disadvantages caused by line tracing sensors, such as false counting and retarding action.

2 Hardware

Hardware design is composed by three parts: main board, circuits of signal processing and circuits of execution drive.

2.1 Main controller and system structure

Widely compared, the main controller we adopted turns out to be fast, capable, and stable. There are ADC modules, Capture triggers, and PWM generating modules. Unlike other general 8-bits controller which lack of these hardware resources, our system can save some external circuits that were already integrated. The design chooses MSP430F449, a Texas Instruments product, as the main controller. It contains six 8-bits I/O ports, several capture triggers, comparers, 60K FLASH and 256Byte Flash Information Memory (FIM). Through on system programming, this short piece of memory in FIM was used to store azimuth value when calibrating the electronic compass. Fig.1 shows the system structure.

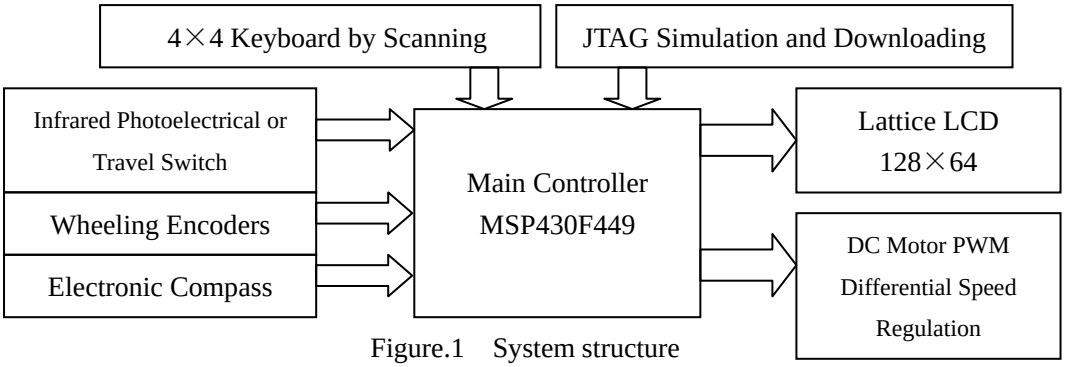

Figure.1 System structure

2.2 Electronic compass module

CMPS03, electronic compass module designed for robots, provides angle signals for navigation system of the robot. After calibration in an unknown environment, CMPS03 could generate a unique digital number to represent the current azimuth of the robot. This module integrates two magnetic field sensors, which were named KMZ51 from Philips, can perceive the geomagnetism. The outputs of two sensors are calculated in order to get the geomagnetism magnitudes of horizontal components. It is powered by 5V, 15mA, and it provides accuracy in 0.1 degree. As for interfacing with the controller, the module possesses two output modes, PWM mode and I^2C field bus mode. We chose PWM mode, because MSP430F449 has fertile hardware resources which can easily afford to capture the positive edge and negative edge of PWM pulse. The width of the positive pulse represents the angle value. Pulse width ranges from 1ms (0 degree) to 36.99ms (359.9 degree), so it is 100us per degree with 1ms offset. And there is 65ms negative pulse after every positive pulse. Therefore, the period of PWM output ranges from 66ms to 102ms.

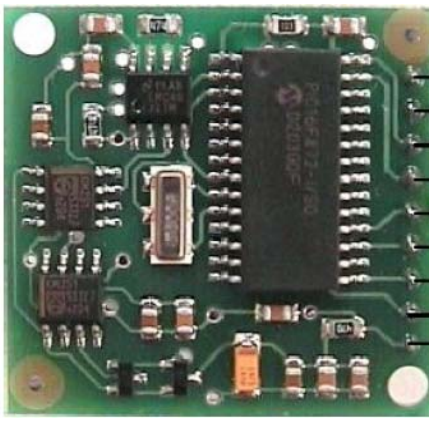

a) CMPS03

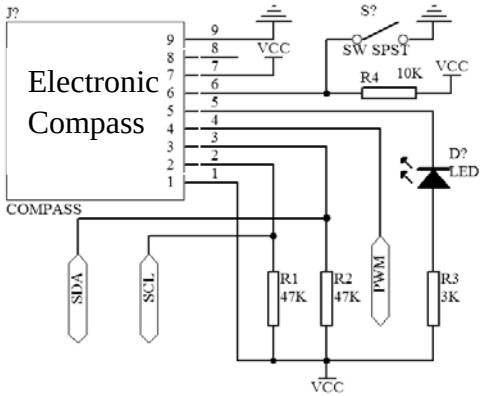

b) External Circuit of the Module

Figure.2 Application of Electronic Compass

The electronic compass has two work statuses, calibrating status and measuring status. When calibrating the electronic compass, the compass should first be put in the center of the environment. Then, get the compass pointed to the north in horizontal, and press the calibrating button. After this, the module will store the calibrating information and pull pin-5 to low level until next time the calibrating button was pressed. Turn 90 degree and repeat the above actions until all information of the four directions are recorded. Under the measuring status, the PWM output and I^2C field bus output work at the same time, while they are not completely synchronized.

2.3 Encoder module

This module is composed by two encoders and related circuits of signal processing. This design adopts rolling encoders, E40S-8-100-3, from Autonics. It is an incremental shaft encoder with 100 pulses output per round and three phase output, phase A, phase B and phase Z. There is 90 degree phase difference, so they could be used for judging wheeling direction. And phase Z provides the period time of phase A and phase B, so it could be used for calculating the wheeling speed.

Besides, each Timer of MSP430F449 possesses capture function. For example, TIMERA has 3 capture ports, and TIMERB has 7 capture ports. In this application, TIMERA0 and TIMERA1 were used as capture port of wheeling encoders. The weak signal that the wheeling encoders output should be convert into a standard signal with 3.3V, 15mA.

2.4 Sensor module and I/O module

Aside from electronic compass and wheeling encoders, there are two other kinds of sensors on the robot. One is adjustable, long distance Infrared Photoelectrical sensor (G30_3A1NA) which was assembled in the front of the robot. In order to avoid obstacles in front of the robot, there are three Infrared Photoelectrical sensors pointed to the direct ahead, the left-front and the right-front. The others are travel switches which were assembled at the robot's arms. They can provide functions of posture detecting and travel protection.

Given that all possibilities and different missions may occur, different suites of programs for the robot had been downloaded into the system. And at the beginning of the contest, the operator can choose any one of programs in order to be more competitive. Therefore, the human-robot interaction is carried out by a keyboard and a LCD displayer.

3 Software

The design adopted IAR Embedded Workbench EW430 as the development platform of MSP430. The following are its basic features: 1) support for ANSI C and Embedded C++; 2) inner built MSP430 feature extension; 3) multi-level optimized code length and enforced running speed; 4) support float data in 32-bits and 64-bits and hardware multiplier; 5) support low power mode by inner function; 6) support mixed programming of C and Assembly Language [4]. The application based on this development platform and used C programming language. Combining with the simulator MSP-FET430P449, the system can perform an online debugging.

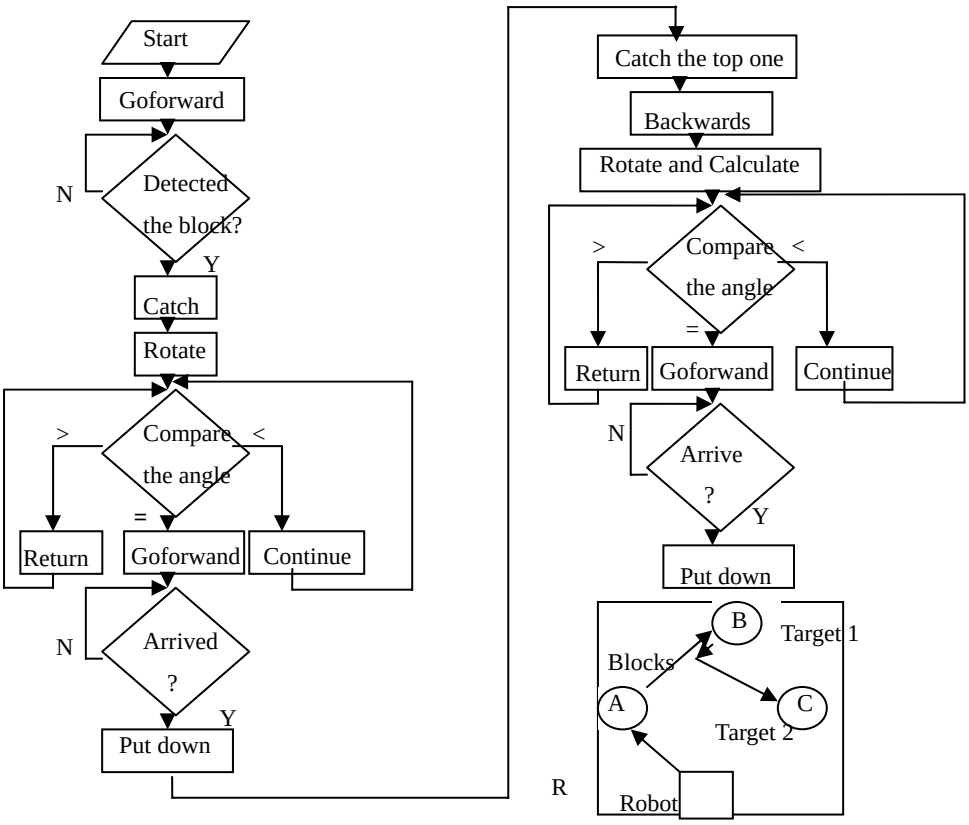

Figure.3 Program flow and robot routes

3.1 Program flows

Programs can be various according to different conditions, such as friction force, weight bearing and inclination. The following describes a realization of designed programs. Typically, this program involves most of the hardware and their functions. As shown as Fig.3, the robot R completes the task to move two blocks at point A to point B and point C respectively.

3.2 Compensation algorithm

As the robot arrives at point B, there are some deviations which are caused by uncontrolled environment factors. When the robot hits the island, a platform uses to support the blocks, the robot will adjust the direction physically under the back force of the collision. As a result, when the robot goes backwards, the outcome depends on the adjusting magnitude in the collision. It is shown as Fig.4 (a).

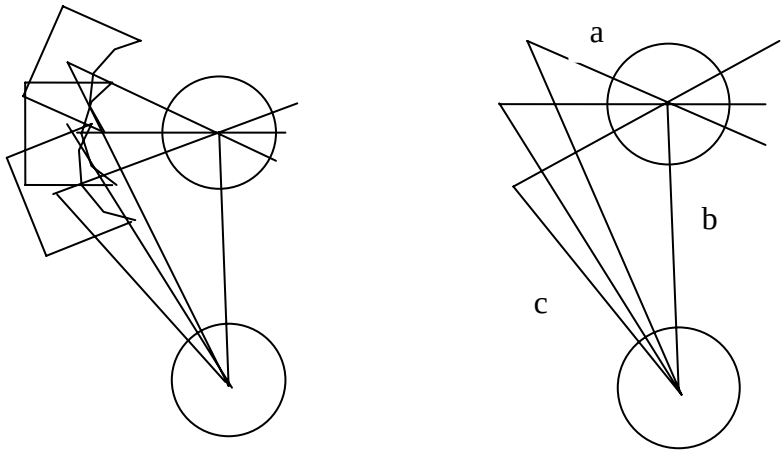

a) 3 situations b) Simplified graph

Figure.4 Locations after the robot went backwards

The graph indicates that the robot should recalculate the magnitude of rotating angle. Recalculation can compensate the angle deviation caused by physical adjustment. In Fig.4 (b), the backwards distance is *a*, the distance between two platforms is *b*, and the distance that the robot moves is *c*. The opposite angle of side c is angle c, which is the sum of theoretical arriving angle and deviation angle. In fact, the question is that side a, side b and angle c are known, and side c and angle b are unknown. According to law of consines :

$$c^2 = a^2 + b^2 - 2ab\cos\angle c \qquad (3\text{-}1)$$

And according to (3-1), we can infer that:

$$c = \sqrt{a^2 + b^2 - 2ab\cos\angle c} \qquad (3\text{-}2)$$

And according to law of sines (3-3) :

$$\frac{a}{\sin\angle a} = \frac{b}{\sin\angle b} = \frac{c}{\sin\angle c} \qquad (3\text{-}3)$$

And according to the above functions, we have :

$$\angle b = \arcsin\frac{b\sin c}{c} \qquad (3\text{-}4)$$

So far, the system can recalculate side c and angle b bases on known factors. Through this compensation algorithm, the robot can arrive at point C more accurately. The experiment result turns out that the deviation before compensation is $\pm$3cm, while the deviation after compensation is reduced to $\pm$0.5cm.

4 Conclusion

This design displays some innovative features. On one hand, it realizes a cute and fast navigation system for the control of mobile robots. And its speed is far more than those robot based on tracing lines in the contest. On the other hand, this high efficient design is a product of low power consumption. The last point is that it adopts an electronic compass for navigation, abandons the

restriction of tracing lines and enlarges the selection of routes. Meanwhile, through the compensation algorithm, both the motion accuracy and the stability are enhanced.

Citation

[1] Qiu Jifan. Design and Realization of Line-tracking Navigation System for Mobile Robot [J]. Contorl & Automation, 2006, 22(9-2):201-203.

[2] Wan Yonglun, Ding jiexiong. A Line-tracking Control System of Robot[J]. Journal of UEST of China, 2003, 32(1):48-50.

[3]R.M. DeSantis. Path-Tracking for Car-Like Robots with Single and Double Steering[J].IEEE transactions on vehicular technology,1995,44(2):366-377.

[4]Hu Dake. C Programming Desgin and Development of MSP430 MCU[M]. Beijing University of Aeronautics and Astronautics Press, 2002.